Dandenong Wheels & Castors

CASCOO Australia & New Zealand

PRODUCT DATA SHEET

SWU5-50-STB

SWU5 SERIES SWIVEL CASTOR
90 x 66MM PLATE, TOTAL BRAKE
Ø50MM DOUBLE BALL BEARING WHEEL

EAN: 4260654033496

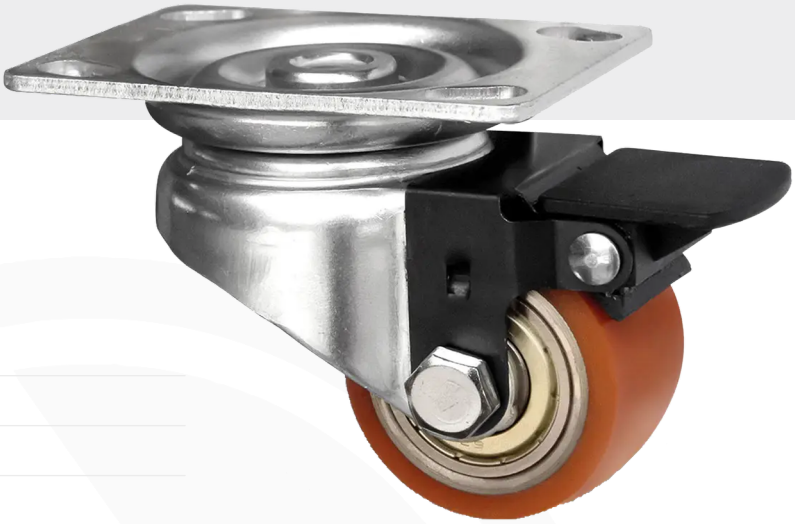

SPECIFICATIONS

WHEEL

Wheel Diameter	50 mm
Tread Width	33 mm
Hub Width	36 mm
Axle Size	M8
Tread Material	Polyurethane, 93-95 Shore A
Wheel Material	Blue Passivated Steel
Bearing	Double Ball Bearing
Thread Guard	N/A
Operating Range	-20°C to +60°C

FRAME

Mount Type	Plate
Mount Material Thickness	3 mm
Fork Material Thickness	2.5 mm
Mount Dimensions	75 / 61 x 51 / 45 mm
Axle Offset	30 mm
Overall Height	72 mm
Swivel Radius	75 mm
Rated Capacity (4km/h)	150 kg
Complies With	DIN EN 12530

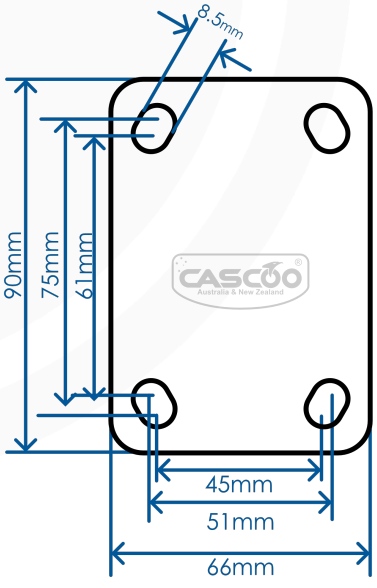

DANDENONG WHEELS & CASTORS
310 South Gippsland Highway, Dandenong South VIC 3175
(03) 9792 3949 | sales@dandenongcastors.com.au | www.dandenongcastors.com.au

Dandenong Wheels & Castors

CASCOO Australia & New Zealand

SWU5-50-STB

SWU5 SERIES SWIVEL TOTAL BRAKE CASTOR, Ø50MM WHEEL

EAN: 4260654033496

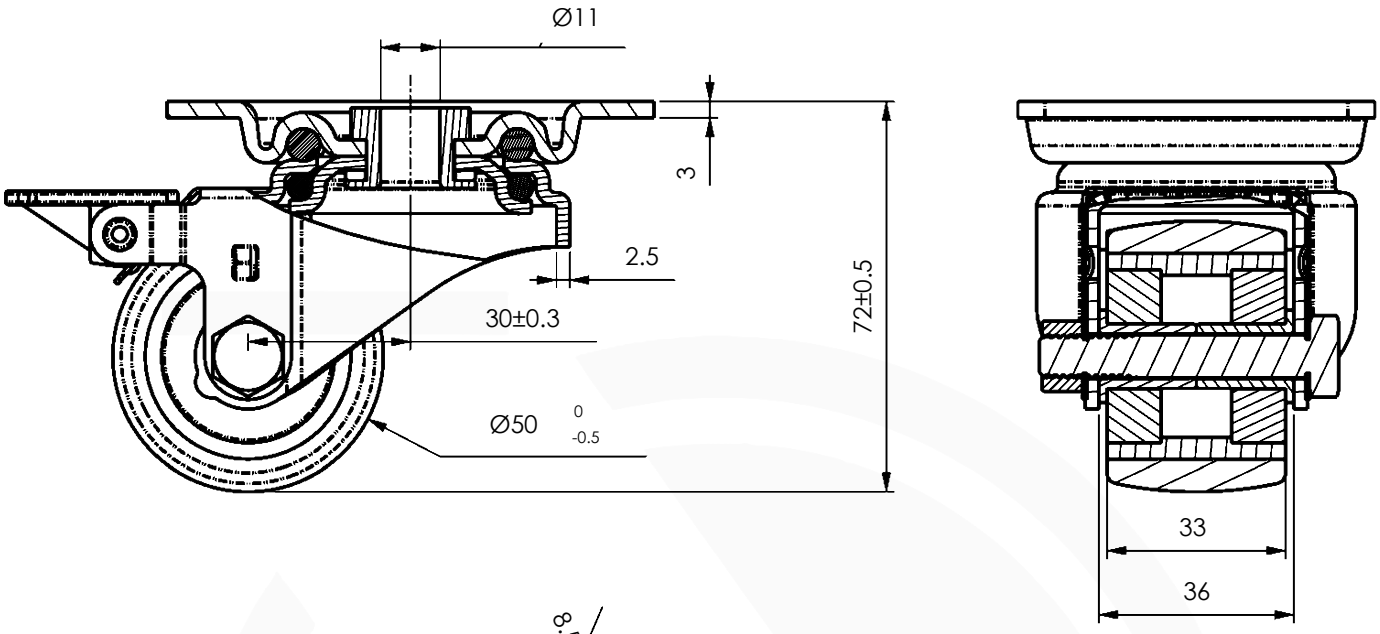

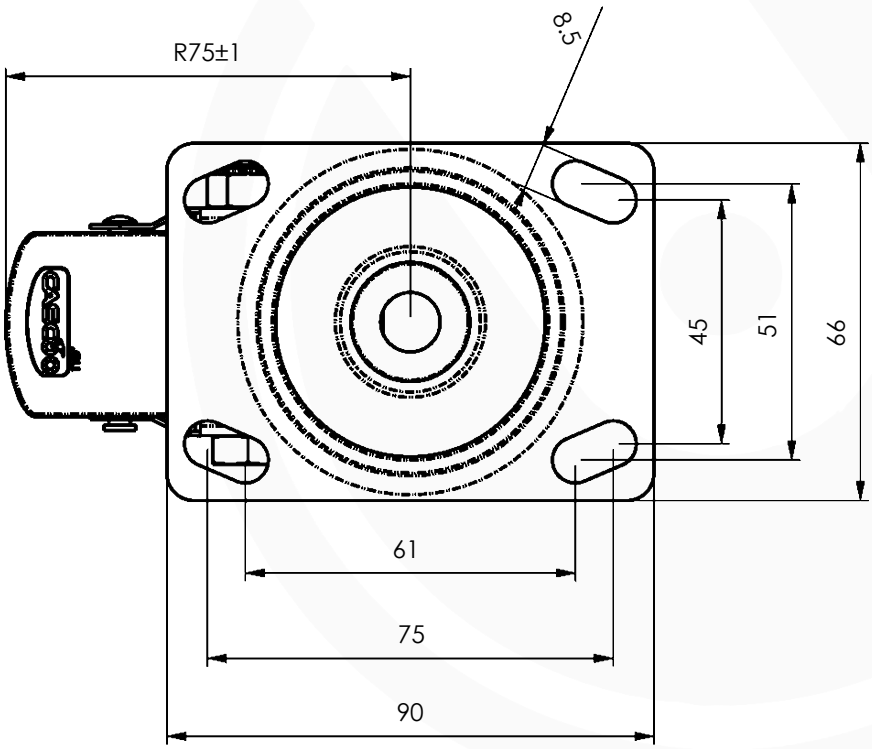

CASCOO Australia & New Zealand

STEP Files Available Online
Scan or click the QR code

DANDENONG WHEELS & CASTORS
310 South Gippsland Highway, Dandenong South VIC 3175
(03) 9792 3949 | sales@dandenongcastors.com.au | www.dandenongcastors.com.au