Dandenong Wheels & Castors

CASCOO Australia & New Zealand

PRODUCT DATA SHEET

SWU5-50-BHTB

SWU5 SERIES SWIVEL CASTOR
Ø13MM BOLT HOLE, WHEEL BRAKE
Ø50MM DOUBLE BALL BEARING WHEEL

EAN: 4260654035513



SPECIFICATIONS

WHEEL

Wheel Diameter	50 mm
Tread Width	33 mm
Hub Width	36 mm
Axle Size	M8
Tread Material	Polyurethane, 93-95 Shore A
Wheel Material	Blue Passivated Steel
Bearing	Double Ball Bearing
Thread Guard	N/A
Operating Range	-20°C to +60°C

FRAME

Mount Type	Bolt Hole
Mount Material Thickness	2.5 mm
Fork Material Thickness	2.5 mm
Bolt Hole Diameter	13 mm
Axle Offset	30 mm
Overall Height	70 mm
Swivel Radius	75 mm
Rated Capacity (4km/h)	150 kg
Complies With	DIN EN 12530

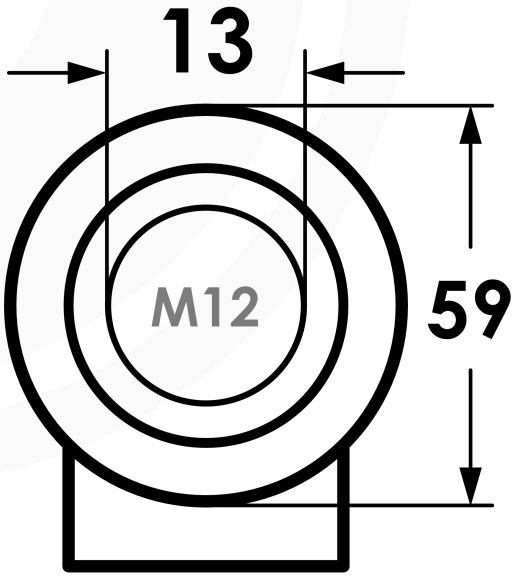

DANDENONG WHEELS & CASTORS
310 South Gippsland Highway, Dandenong South VIC 3175
(03) 9792 3949 | sales@dandenongcastors.com.au | www.dandenongcastors.com.au

Dandenong Wheels & Castors

CASCOO Australia & New Zealand

SWU5-50-BHTB

SWU5 SERIES BOLT HOLE SWIVEL WHEEL BRAKE CASTOR, Ø50MM WHEEL

EAN: 4260654035513

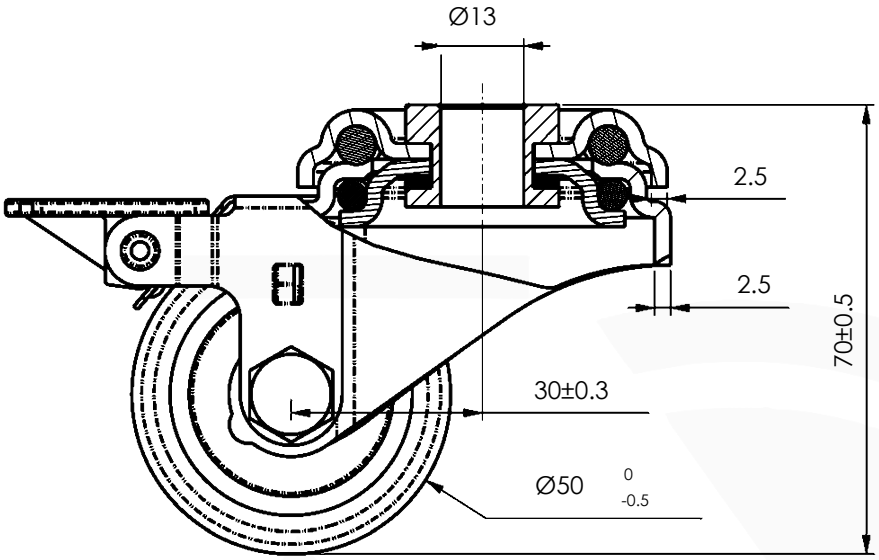

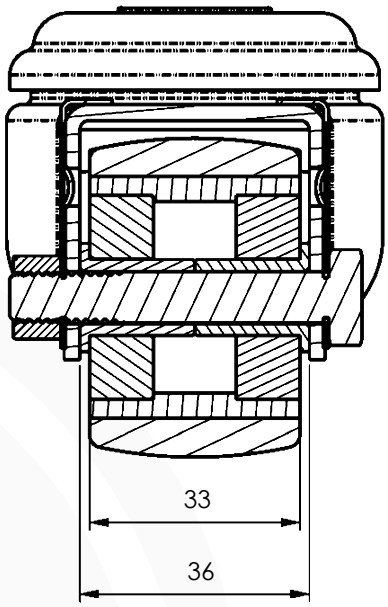

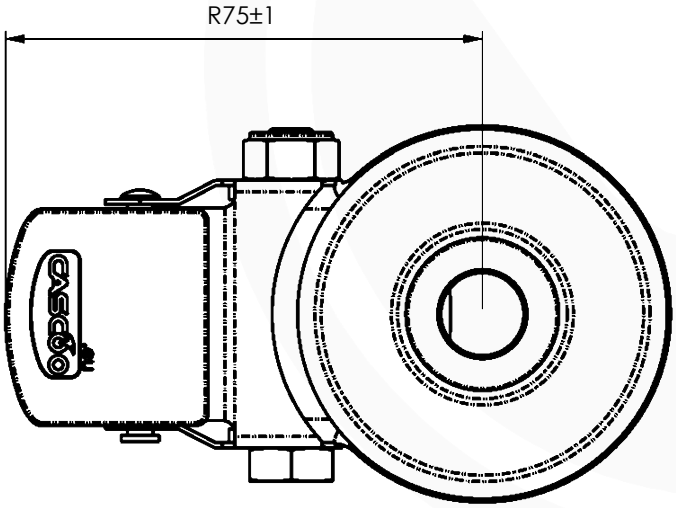

CASCOO Australia & New Zealand

STEP Files Available Online
Scan or click the QR code

DANDENONG WHEELS & CASTORS
310 South Gippsland Highway, Dandenong South VIC 3175
(03) 9792 3949 | sales@dandenongcastors.com.au | www.dandenongcastors.com.au