Dandenong Wheels & Castors

CASCOO Australia & New Zealand

PRODUCT DATA SHEET

SWU5-35-BHTB

SWU5 SERIES SWIVEL CASTOR
Ø11MM BOLT HOLE, WHEEL BRAKE
Ø35MM DOUBLE BALL BEARING WHEEL

EAN: 4260654035506



SPECIFICATIONS

WHEEL

Wheel Diameter	35 mm
Tread Width	27 mm
Hub Width	30 mm
Axle Size	M6
Tread Material	Polyurethane, 93-95 Shore A
Wheel Material	Blue Passivated Steel
Bearing	Double Ball Bearing
Thread Guard	N/A
Operating Range	-20°C to +60°C

FRAME

Mount Type	Bolt Hole
Mount Material Thickness	2 mm
Fork Material Thickness	2 mm
Bolt Hole Diameter	11 mm
Axle Offset	15 mm
Overall Height	50.5 mm
Swivel Radius	56 mm
Rated Capacity (4km/h)	100 kg
Complies With	DIN EN 12530

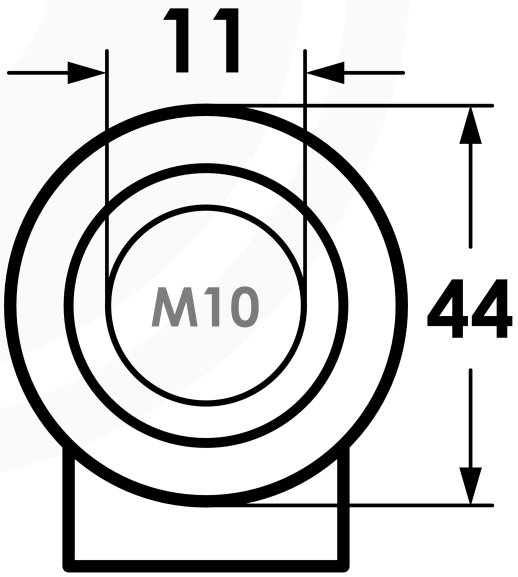

DANDENONG WHEELS & CASTORS
310 South Gippsland Highway, Dandenong South VIC 3175
(03) 9792 3949 | sales@dandenongcastors.com.au | www.dandenongcastors.com.au

Dandenong Wheels & Castors

CASCOO Australia & New Zealand

SWU5-35-BHTB

SWU5 SERIES BOLT HOLE SWIVEL WHEEL BRAKE CASTOR, Ø35MM WHEEL

EAN: 4260654035506

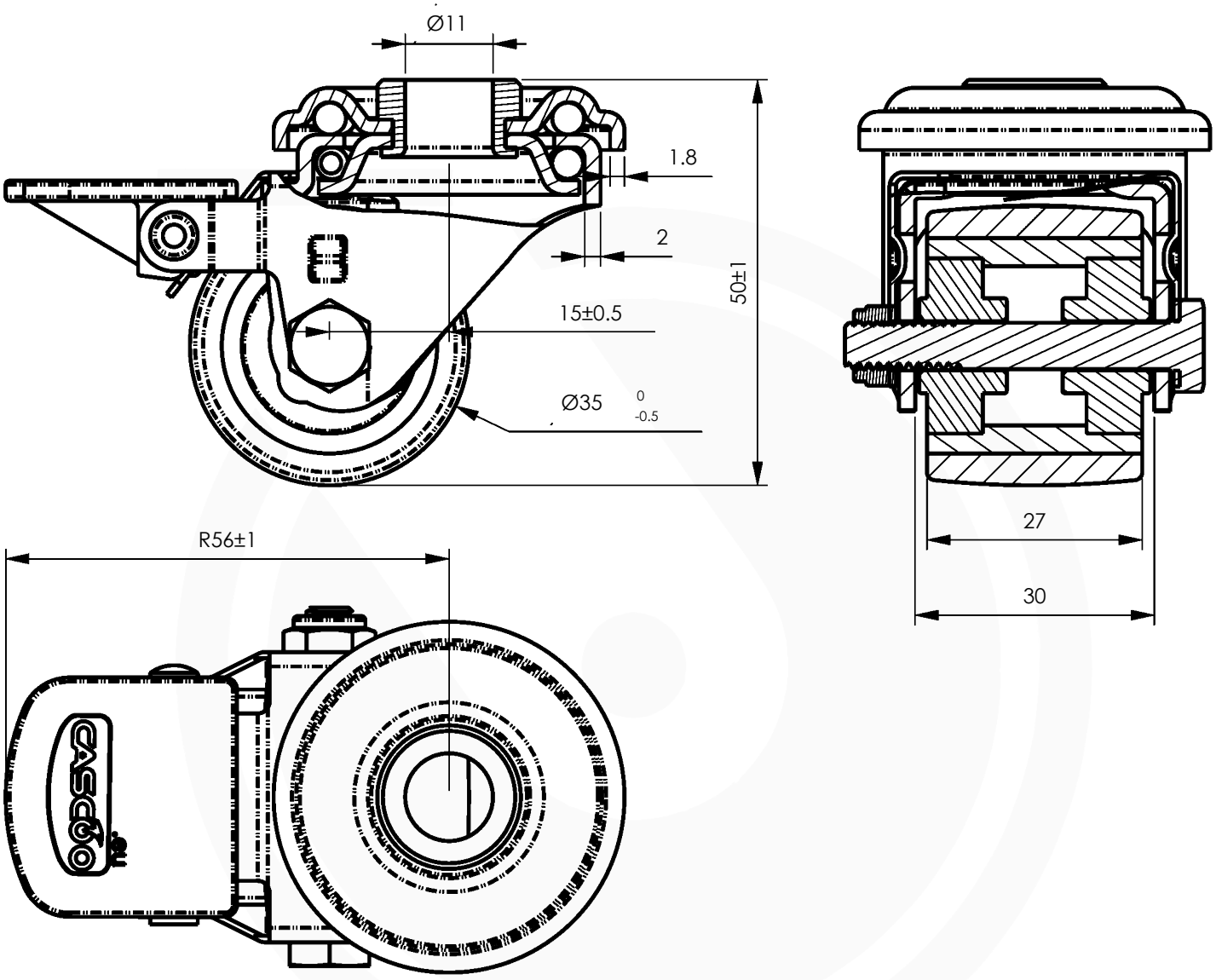

CASCOO Australia & New Zealand

STEP Files Available Online
Scan or click the QR code

DANDENONG WHEELS & CASTORS
310 South Gippsland Highway, Dandenong South VIC 3175
(03) 9792 3949 | sales@dandenongcastors.com.au | www.dandenongcastors.com.au