Dandenong Wheels & Castors

PRODUCT DATA SHEET

LV62HWHT

LEVELLING SWIVEL CASTOR

Ø62 MM NYLON WHEEL

HAND WHEEL ADJUSTMENT

SPECIFICATIONS

Adjustment	Hand wheel
Wheel material	Nylon
Wheel diameter	62 mm
Tread width (nominal)	30 mm
Housing colour	Crème
Maximum load capacity	500 kg
Mounting	Top plate
Plate dimensions	90 x 90 mm
Hole centres	70 x 70 mm
Mounting holes	4 x Ø9 mm
Overall height	110 mm
Adjustment range	0-12 mm



Representative image; size may differ.

HEIGHT AND ADJUSTMENT

Overall height is listed with the levelling foot retracted.

The adjustment range adds to the overall height when adjusting.

Technical drawings on page 2.

DANDENONG WHEELS & CASTORS
310 South Gippsland Highway, Dandenong South VIC 3175
(03) 9792 3949 | sales@dandenongcastors.com.au | www.dandenongcastors.com.au

LV62HWHT

TECHNICAL DRAWINGS

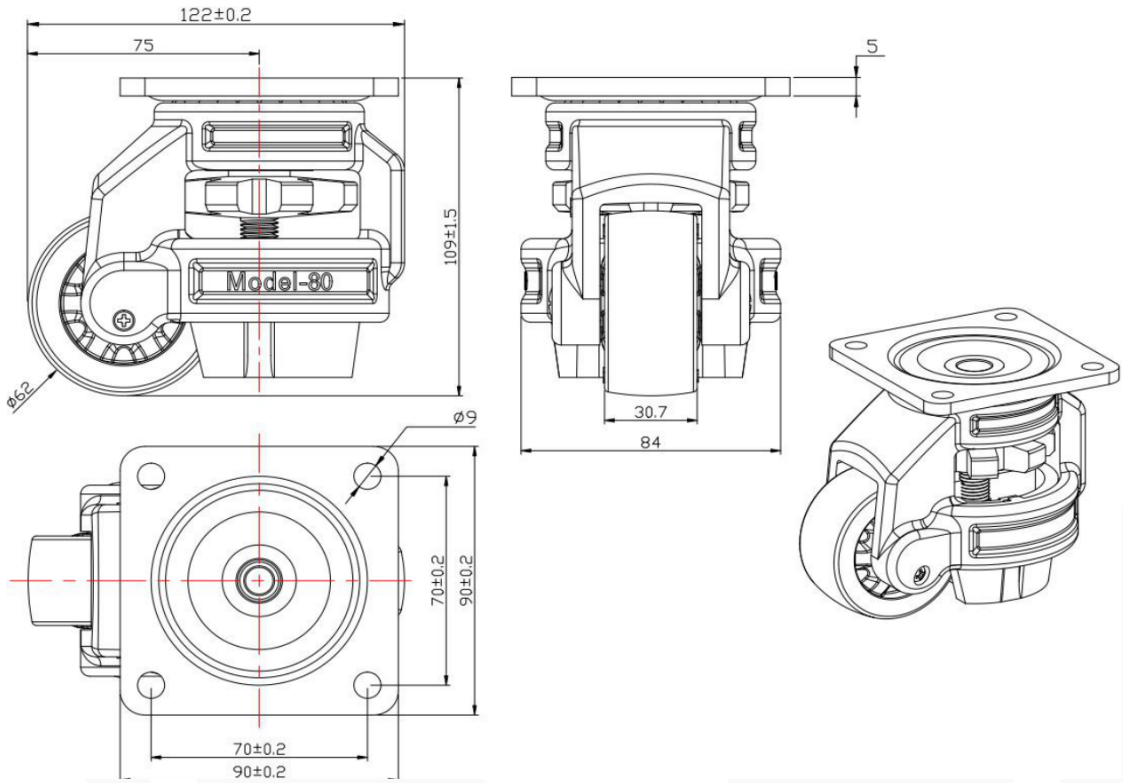

DANDENONG WHEELS & CASTORS
310 South Gippsland Highway, Dandenong South VIC 3175
(03) 9792 3949 | sales@dandenongcastors.com.au | www.dandenongcastors.com.au