Dandenong Wheels & Castors

PRODUCT DATA SHEET

LV50HBLK

LEVELLING SWIVEL CASTOR

Ø50 MM NYLON WHEEL

HAND WHEEL ADJUSTMENT

SPECIFICATIONS

Adjustment	Hand wheel
Wheel material	Nylon
Wheel diameter	50 mm
Tread width (nominal)	24 mm
Housing colour	Black
Maximum load capacity	250 kg
Mounting	Top plate
Plate dimensions	73 x 73 mm
Hole centres	58 x 58 mm
Mounting holes	4 x Ø7 mm
Overall height	85 mm
Adjustment range	0-10 mm



HEIGHT AND ADJUSTMENT

Overall height is listed with the levelling foot retracted.

The adjustment range adds to the overall height when adjusting.

Technical drawings on page 2.

DANDENONG WHEELS & CASTORS
310 South Gippsland Highway, Dandenong South VIC 3175
(03) 9792 3949 | sales@dandenongcastors.com.au | www.dandenongcastors.com.au

LV50HBLK

TECHNICAL DRAWINGS

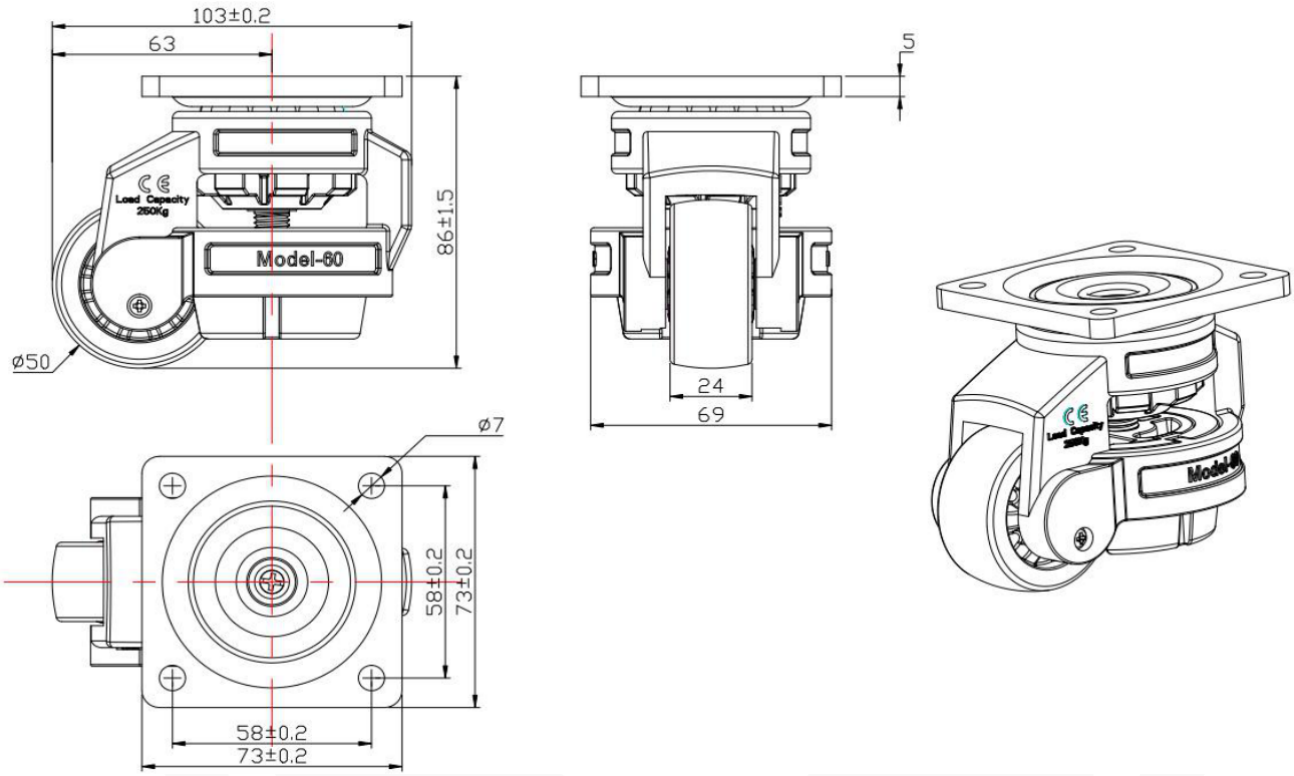

DANDENONG WHEELS & CASTORS
310 South Gippsland Highway, Dandenong South VIC 3175
(03) 9792 3949 | sales@dandenongcastors.com.au | www.dandenongcastors.com.au