Dandenong Wheels & Castors

PRODUCT DATA SHEET

LV40HWHT

LEVELLING SWIVEL CASTOR

Ø40 MM NYLON WHEEL

HAND WHEEL ADJUSTMENT

SPECIFICATIONS

Adjustment	Hand wheel
Wheel material	Nylon
Wheel diameter	40 mm
Tread width (nominal)	19 mm
Housing colour	Crème
Maximum load capacity	50 kg
Mounting	Top plate
Plate dimensions	63 x 63 mm
Hole centres	50 x 50 mm
Mounting holes	4 x Ø7 mm
Overall height	75 mm
Adjustment range	0-8 mm



Representative image; size may differ.

HEIGHT AND ADJUSTMENT

Overall height is listed with the levelling foot retracted.

The adjustment range adds to the overall height when adjusting.

Technical drawings on page 2.

DANDENONG WHEELS & CASTORS
310 South Gippsland Highway, Dandenong South VIC 3175
(03) 9792 3949 | sales@dandenongcastors.com.au | www.dandenongcastors.com.au

LV40HWHT

TECHNICAL DRAWINGS

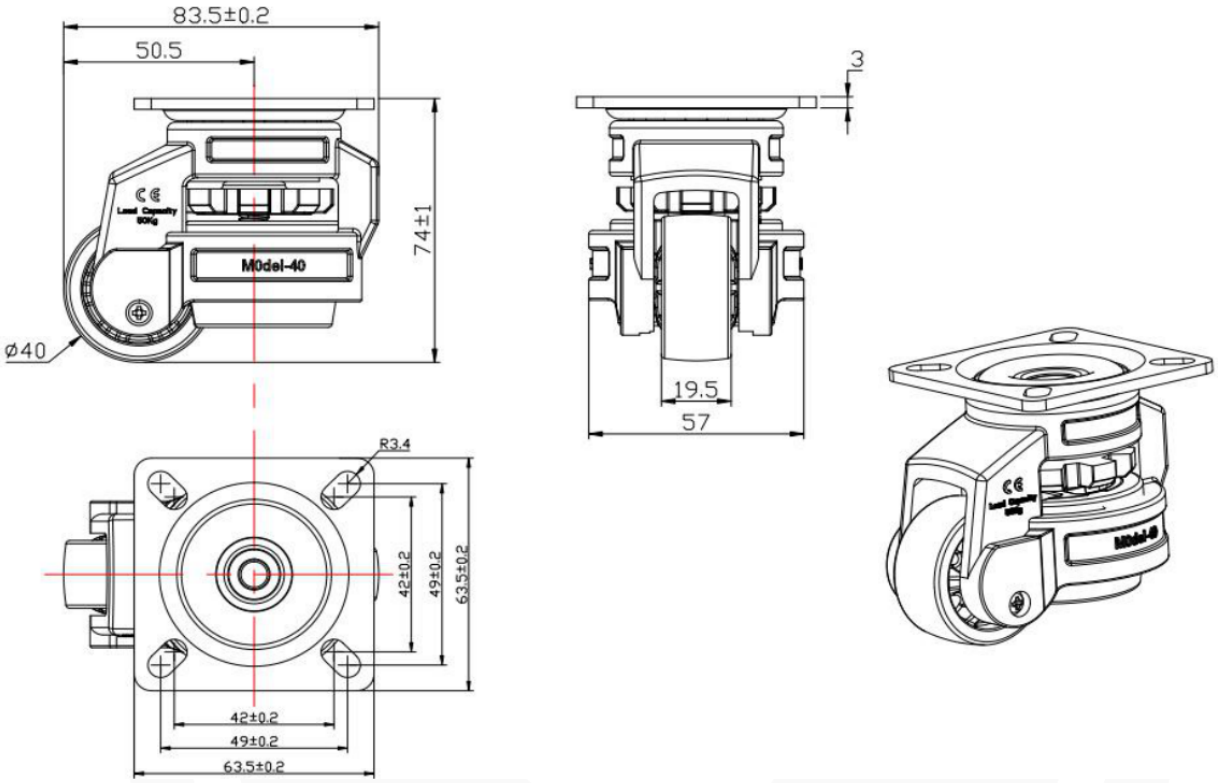

DANDENONG WHEELS & CASTORS
310 South Gippsland Highway, Dandenong South VIC 3175
(03) 9792 3949 | sales@dandenongcastors.com.au | www.dandenongcastors.com.au