Dandenong Wheels & Castors

CASCOO Australia & New Zealand

PRODUCT DATA SHEET

R4E1-80-BHTB

R4E1 SERIES SWIVEL CASTOR Ø13MM BOLT HOLE, TOTAL BRAKE Ø80MM BALL BEARING WHEEL

EAN: 4260390222123



SPECIFICATIONS

WHEEL

Wheel Diameter	80 mm
Tread Width	35 mm
Hub Width	40 mm
Axle Size	M8
Tread Material	Elastic Blue Rubber, 65° Shore A
Wheel Material	Black Polyamide
Bearing	Ball Bearing
Thread Guard	Nylon Thread Guard
Operating Range	-20°C to +80°C

FRAME

Mount Type	Bolt Hole
Mount Material Thickness	2.50 mm
Fork Material Thickness	2.50 mm
Bolt Hole Diameter	13 mm
Axle Offset	40 mm
Overall Height	104 mm
Swivel Radius	127 mm
Rated Capacity (4km/h)	130 kg
Complies With	DIN EN 12532

DANDENONG WHEELS & CASTORS
310 South Gippsland Highway, Dandenong South VIC 3175
(03) 9792 3949 | sales@dandenongcastors.com.au | www.dandenongcastors.com.au

Dandenong Wheels & Castors

CASCOO Australia & New Zealand

R4E1-80-BHTB

R4E1 SERIES BOLT HOLE SWIVEL TOTAL BRAKE CASTOR, Ø80MM WHEEL

EAN: 4260390222123

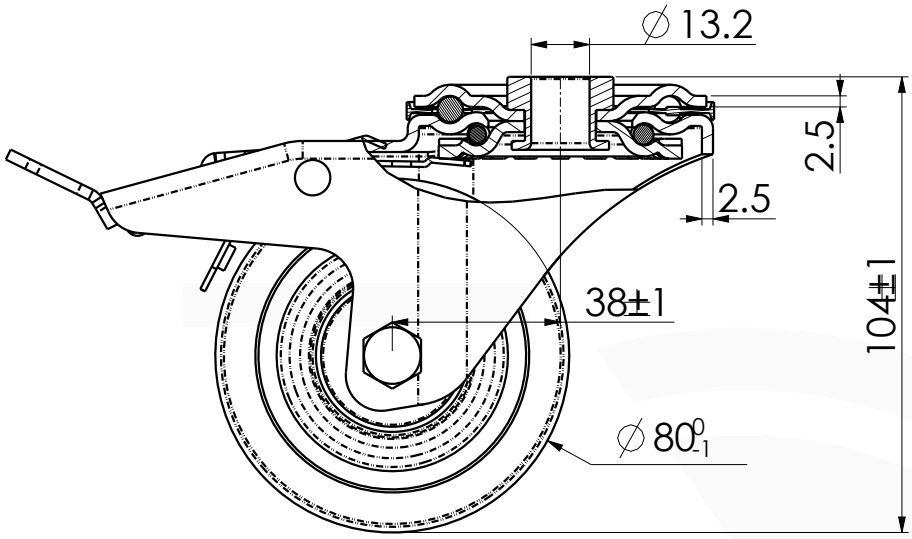

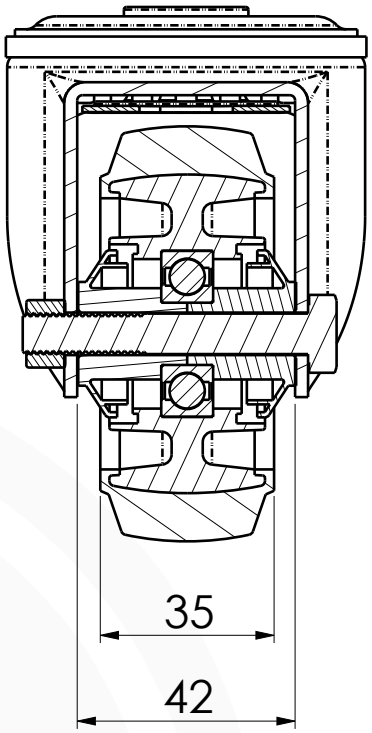

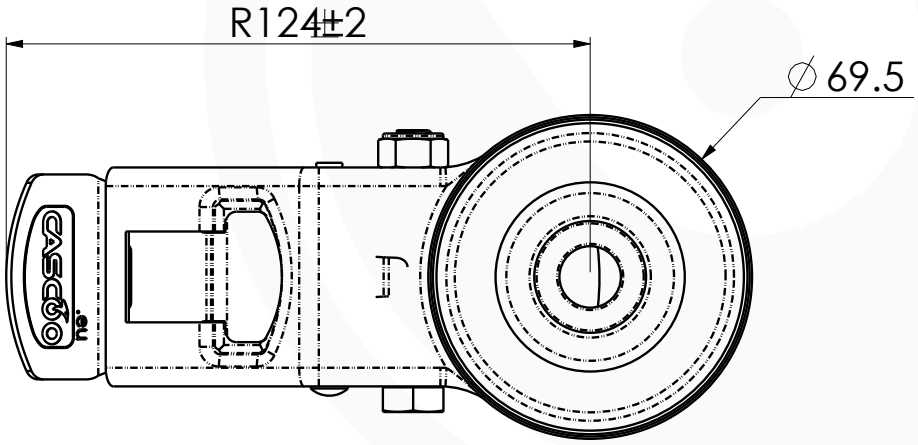

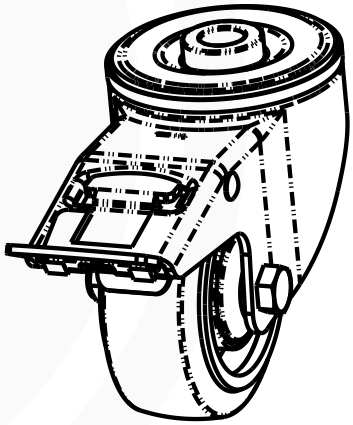

CASCOO Australia & New Zealand

STEP Files Available Online
Scan or click the QR code

DANDENONG WHEELS & CASTORS
310 South Gippsland Highway, Dandenong South VIC 3175
(03) 9792 3949 | sales@dandenongcastors.com.au | www.dandenongcastors.com.au