Dandenong Wheels & Castors

CASCOO® Australia & New Zealand

PRODUCT DATA SHEET

R4E1-80-BH

R4E1 SERIES SWIVEL CASTOR Ø13MM BOLT HOLE MOUNT Ø80MM BALL BEARING WHEEL

EAN: 4260390222574



SPECIFICATIONS

WHEEL

Wheel Diameter	80 mm
Tread Width	35 mm
Hub Width	40 mm
Axle Size	M8
Tread Material	Elastic Blue Rubber, 65° Shore A
Wheel Material	Black Polyamide
Bearing	Ball Bearing
Thread Guard	Nylon Thread Guard
Operating Range	-20°C to +80°C

FRAME

Mount Type	Bolt Hole
Mount Material Thickness	2.50 mm
Fork Material Thickness	2.50 mm
Bolt Hole Diameter	13 mm
Axle Offset	40 mm
Overall Height	104 mm
Swivel Radius	*TBC*
Rated Capacity (4km/h)	130 kg
Complies With	DIN EN 12532

DANDENONG WHEELS & CASTORS
310 South Gippsland Highway, Dandenong South VIC 3175
(03) 9792 3949 | sales@dandenongcastors.com.au | www.dandenongcastors.com.au

Dandenong Wheels & Castors

CASCOO Australia & New Zealand

R4E1-80-BH

R4E1 SERIES BOLT HOLE SWIVEL CASTOR, Ø80MM WHEEL

EAN: 4260390222574

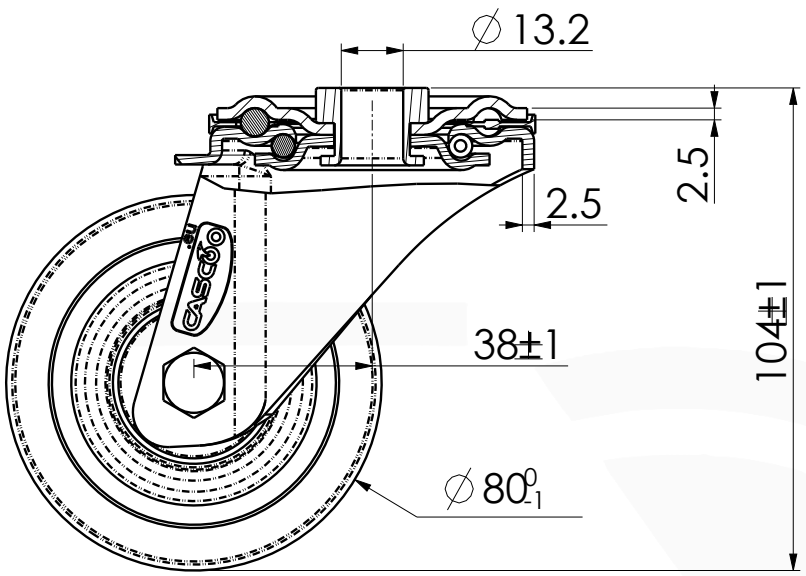

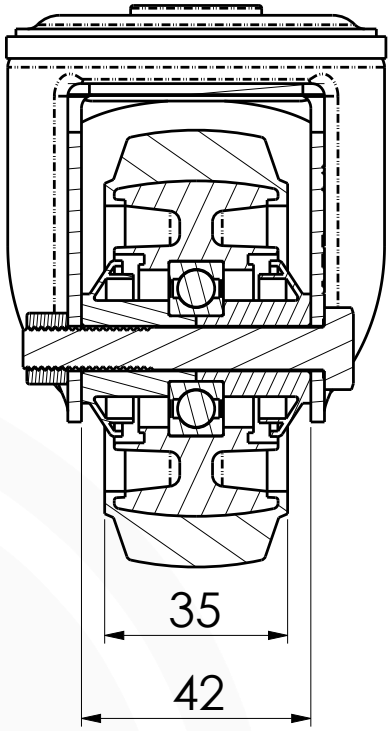

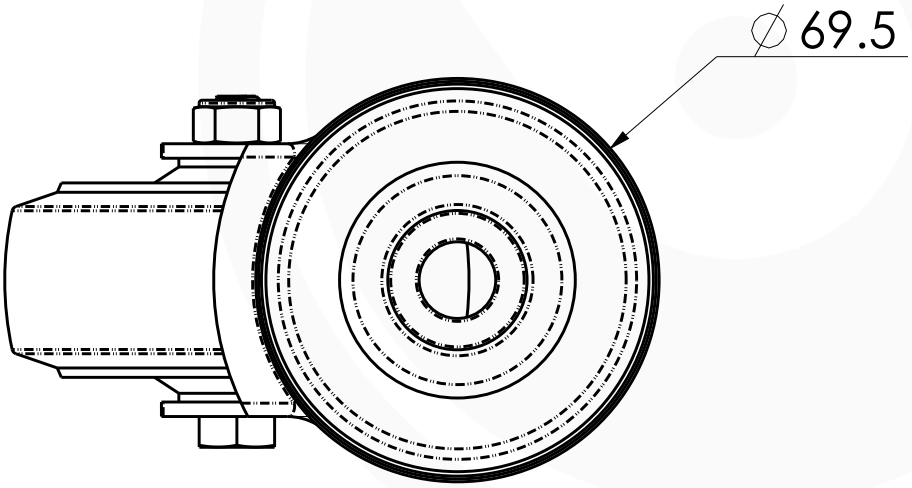

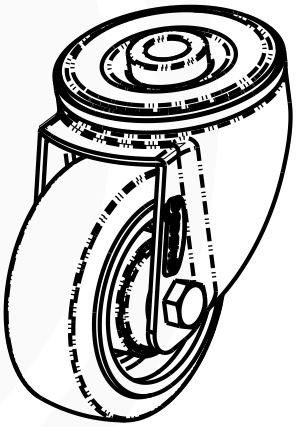

CASCOO Australia & New Zealand

STEP Files Available Online
Scan or click the QR code

DANDENONG WHEELS & CASTORS
310 South Gippsland Highway, Dandenong South VIC 3175
(03) 9792 3949 | sales@dandenongcastors.com.au | www.dandenongcastors.com.au