Dandenong Wheels & Castors

CASCOO Australia & New Zealand

PRODUCT DATA SHEET

R4E1-200-F

R4E1 SERIES FIXED CASTOR
135 x 110MM PLATE MOUNT
Ø200MM DOUBLE BALL BEARING WHEEL

EAN: 4260475213398



SPECIFICATIONS

WHEEL

Wheel Diameter	200 mm
Tread Width	46 mm
Hub Width	59 mm
Axle Size	M12
Tread Material	Elastic Blue Rubber, 65° Shore A
Wheel Material	Black Polyamide
Bearing	Double Ball Bearing
Thread Guard	Nylon Thread Guard
Operating Range	-20°C to +80°C

FRAME

Mount Type	Plate
Mount Material Thickness	3.00 mm
Fork Material Thickness	3.00 mm
Mount Dimensions	105 x 84 / 76 mm
Axle Offset	N/A
Overall Height	235 mm
Swivel Radius	N/A
Rated Capacity (4km/h)	350 kg
Complies With	DIN EN 12532

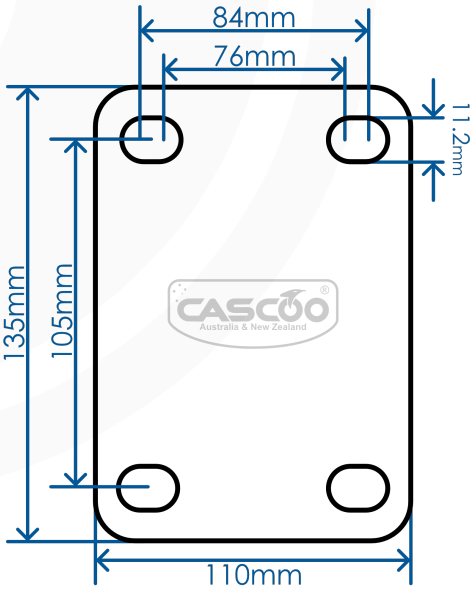

DANDENONG WHEELS & CASTORS
310 South Gippsland Highway, Dandenong South VIC 3175
(03) 9792 3949 | sales@dandenongcastors.com.au | www.dandenongcastors.com.au

Dandenong Wheels & Castors

CASCOO Australia & New Zealand

R4E1-200-F

R4E1 SERIES FIXED CASTOR, Ø200MM WHEEL

EAN: 4260475213398

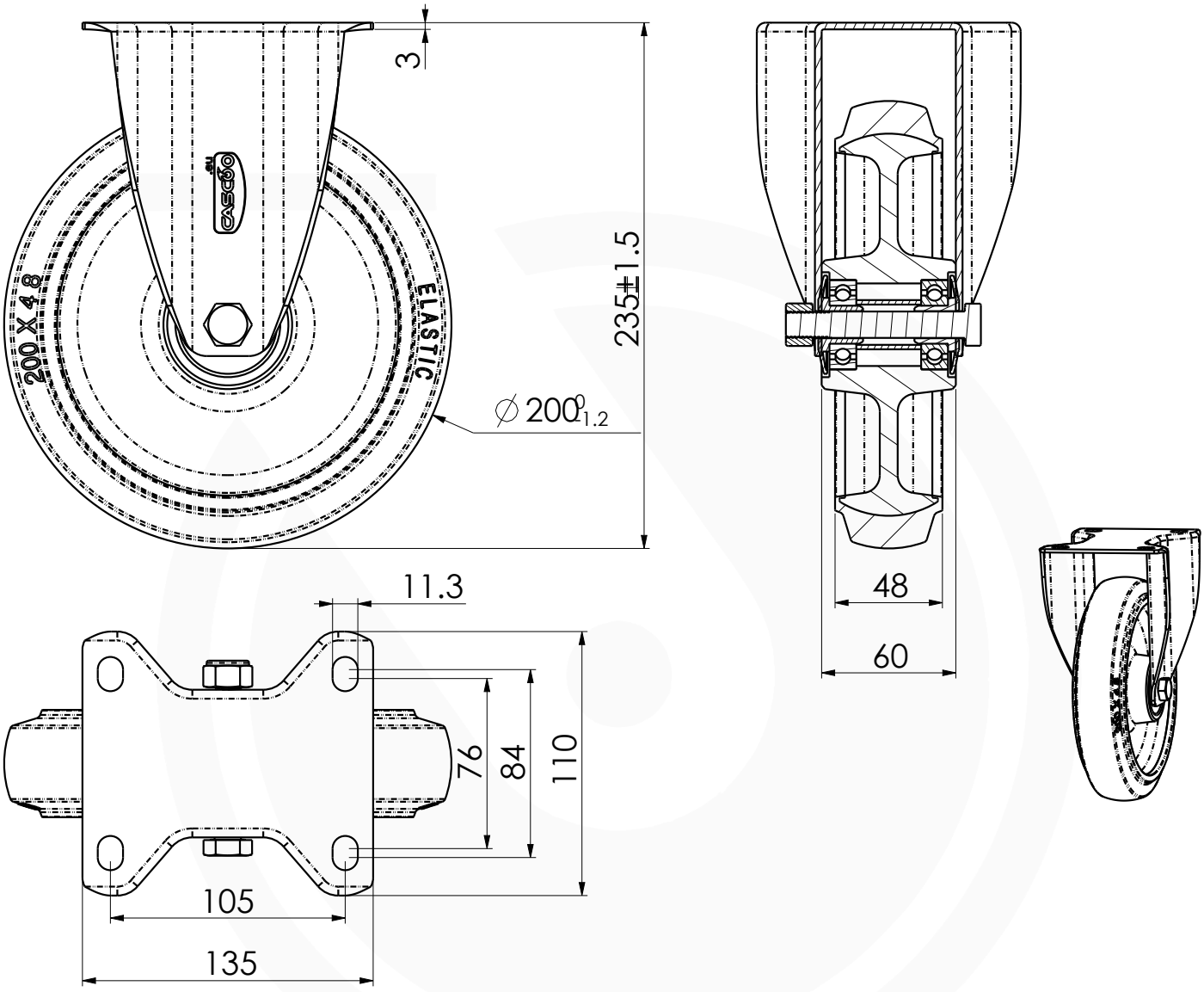

CASCOO Australia & New Zealand

STEP Files Available Online
Scan or click the QR code

DANDENONG WHEELS & CASTORS
310 South Gippsland Highway, Dandenong South VIC 3175
(03) 9792 3949 | sales@dandenongcastors.com.au | www.dandenongcastors.com.au