Dandenong Wheels & Castors

CASCOO® Australia & New Zealand

PRODUCT DATA SHEET

R4E1-160-BH

R4E1 SERIES SWIVEL CASTOR
Ø13MM BOLT HOLE MOUNT
Ø160MM DOUBLE BALL BEARING WHEEL

EAN: 4260654037678



SPECIFICATIONS

WHEEL

Wheel Diameter	160 mm
Tread Width	46 mm
Hub Width	59 mm
Axle Size	M12
Tread Material	Elastic Blue Rubber, 65° Shore A
Wheel Material	Black Polyamide
Bearing	Double Ball Bearing
Thread Guard	Nylon Thread Guard
Operating Range	-20°C to +80°C

FRAME

Mount Type	Bolt Hole
Mount Material Thickness	3.50 mm
Fork Material Thickness	3.00 mm
Bolt Hole Diameter	13 mm
Axle Offset	55 mm
Overall Height	189 mm
Swivel Radius	*TBC*
Rated Capacity (4km/h)	250 kg
Complies With	DIN EN 12532

DANDENONG WHEELS & CASTORS
310 South Gippsland Highway, Dandenong South VIC 3175
(03) 9792 3949 | sales@dandenongcastors.com.au | www.dandenongcastors.com.au

Dandenong Wheels & Castors

CASCOO Australia & New Zealand

R4E1-160-BH

R4E1 SERIES BOLT HOLE SWIVEL CASTOR, Ø160MM WHEEL

EAN: 4260654037678

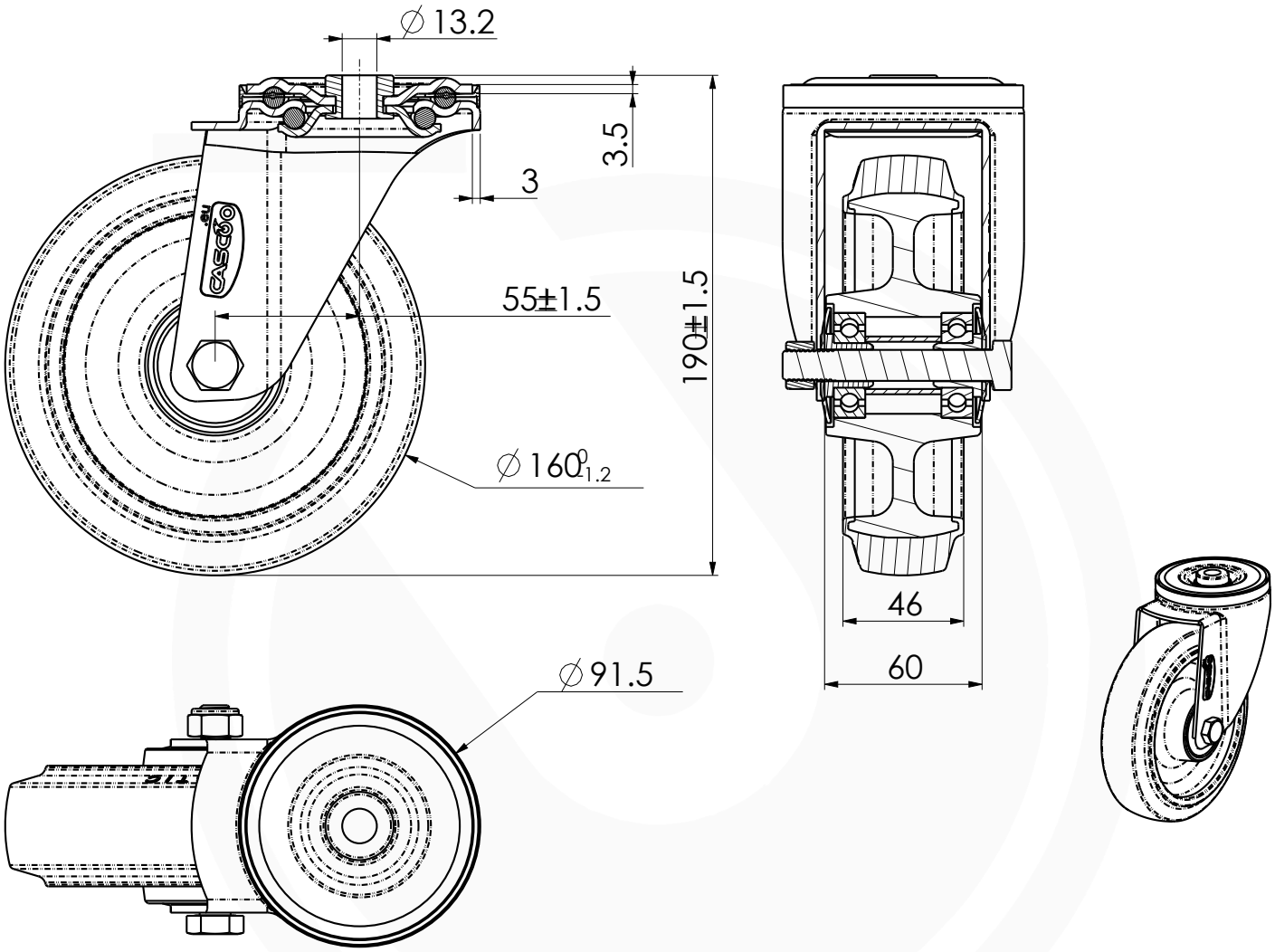

CASCOO Australia & New Zealand

STEP Files Available Online
Scan or click the QR code

DANDENONG WHEELS & CASTORS
310 South Gippsland Highway, Dandenong South VIC 3175
(03) 9792 3949 | sales@dandenongcastors.com.au | www.dandenongcastors.com.au