Dandenong Wheels & Castors

CASCOO Australia & New Zealand

PRODUCT DATA SHEET

R4E1-125-STB

R4E1 SERIES SWIVEL CASTOR
105 x 80MM PLATE, TOTAL BRAKE
Ø125MM BALL BEARING WHEEL

EAN: 4260475210700



SPECIFICATIONS

WHEEL

Wheel Diameter	125 mm
Tread Width	38 mm
Hub Width	50 mm
Axle Size	M10
Tread Material	Elastic Blue Rubber, 65° Shore A
Wheel Material	Black Polyamide
Bearing	Ball Bearing
Thread Guard	Nylon Thread Guard
Operating Range	-20°C to +80°C

FRAME

Mount Type	Plate
Mount Material Thickness	3.00 mm
Fork Material Thickness	2.50 mm
Mount Dimensions	80 / 77 x 60 mm
Axle Offset	45 mm
Overall Height	155 mm
Swivel Radius	127 mm
Rated Capacity (4km/h)	220 kg
Complies With	DIN EN 12532

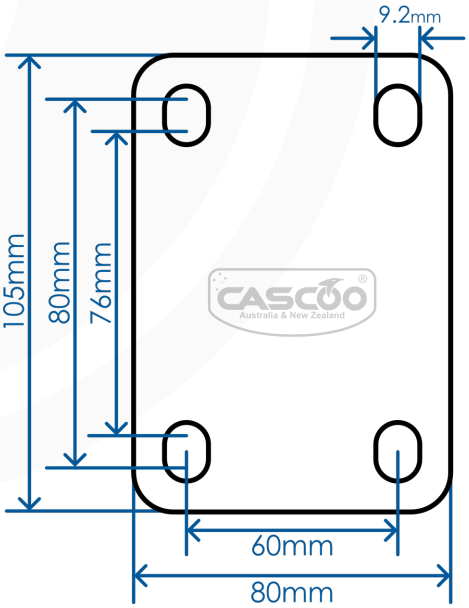

DANDENONG WHEELS & CASTORS
310 South Gippsland Highway, Dandenong South VIC 3175
(03) 9792 3949 | sales@dandenongcastors.com.au | www.dandenongcastors.com.au

Dandenong Wheels & Castors

CASCOO Australia & New Zealand

R4E1-125-STB

R4E1 SERIES SWIVEL TOTAL BRAKE CASTOR, Ø125MM WHEEL

EAN: 4260475210700

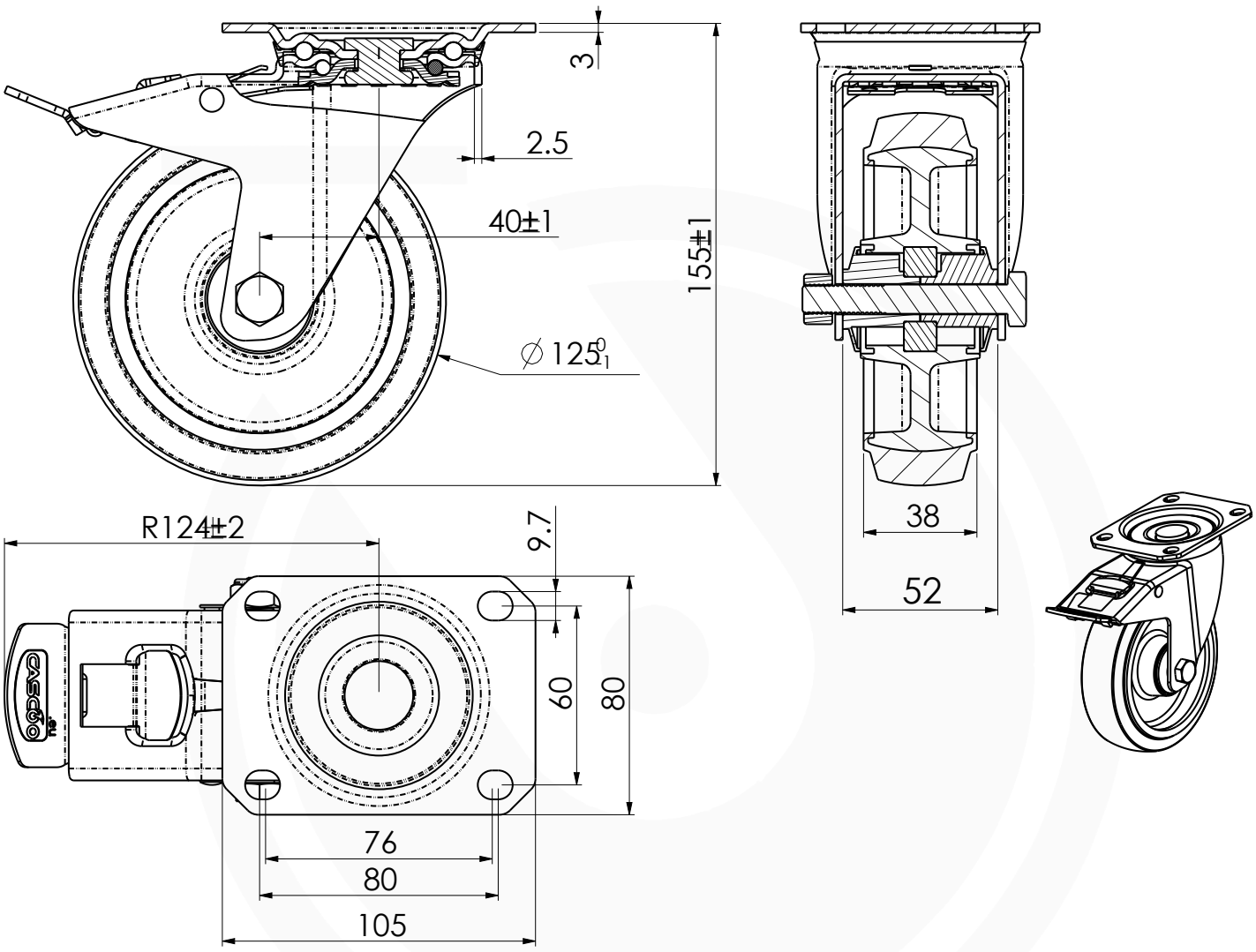

CASCOO Australia & New Zealand

STEP Files Available Online
Scan or click the QR code

DANDENONG WHEELS & CASTORS
310 South Gippsland Highway, Dandenong South VIC 3175
(03) 9792 3949 | sales@dandenongcastors.com.au | www.dandenongcastors.com.au