Dandenong Wheels & Castors

CASCOO Australia & New Zealand

PRODUCT DATA SHEET

R4E1-125-BHTB

R4E1 SERIES SWIVEL CASTOR Ø13MM BOLT HOLE, TOTAL BRAKE Ø125MM BALL BEARING WHEEL

EAN: 4260390227838



SPECIFICATIONS

WHEEL

Wheel Diameter	125 mm
Tread Width	38 mm
Hub Width	50 mm
Axle Size	M10
Tread Material	Elastic Blue Rubber, 65° Shore A
Wheel Material	Black Polyamide
Bearing	Ball Bearing
Thread Guard	Nylon Thread Guard
Operating Range	-20°C to +80°C

FRAME

Mount Type	Bolt Hole
Mount Material Thickness	2.50 mm
Fork Material Thickness	2.50 mm
Bolt Hole Diameter	13 mm
Axle Offset	40 mm
Overall Height	154 mm
Swivel Radius	127 mm
Rated Capacity (4km/h)	160 kg
Complies With	DIN EN 12532

DANDENONG WHEELS & CASTORS
310 South Gippsland Highway, Dandenong South VIC 3175
(03) 9792 3949 | sales@dandenongcastors.com.au | www.dandenongcastors.com.au

Dandenong Wheels & Castors

CASCOO Australia & New Zealand

R4E1-125-BHTB

R4E1 SERIES BOLT HOLE SWIVEL TOTAL BRAKE CASTOR, Ø125MM WHEEL

EAN: 4260390227838

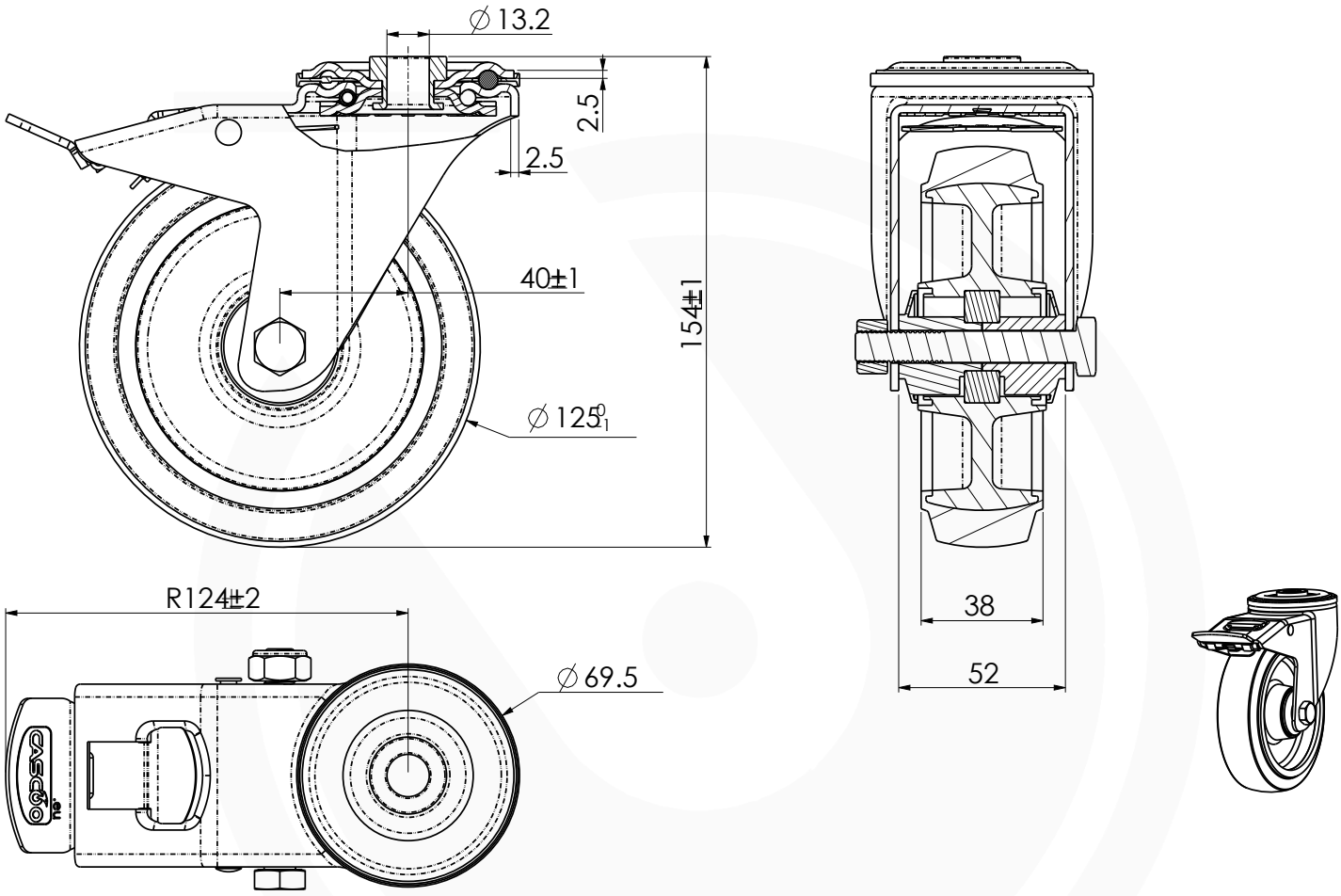

STEP Files Available Online
Scan or click the QR code

DANDENONG WHEELS & CASTORS
310 South Gippsland Highway, Dandenong South VIC 3175
(03) 9792 3949 | sales@dandenongcastors.com.au | www.dandenongcastors.com.au