Dandenong Wheels & Castors

CASCOO Australia & New Zealand

PRODUCT DATA SHEET

N2U6-125-STB

N2U6 S/STEEL SWIVEL CASTOR 96 x 80MM PLATE, TOTAL BRAKE Ø125MM BALL BEARING WHEEL



SPECIFICATIONS

WHEEL

Wheel Diameter	125 mm
Tread Width	32 mm
Hub Width	52 mm
Axle Size	M8
Tread Material	Red TPU, 95 Shore A
Wheel Material	Grey Polyamide
Bearing	Stainless Steel Ball Bearing
Thread Guard	Small Plastic Thread Guard
Operating Range	-40°C to +80°C

FRAME

Mount Type	Plate
Mount Material Thickness	2.5 mm
Fork Material Thickness	2.0 mm
Mount Dimensions	80 / 72 x 60 / 52 mm
Axle Offset	37 mm
Overall Height	155 mm
Swivel Radius	123 mm
Rated Capacity (4km/h)	200 kg
Complies With	DIN EN 12532

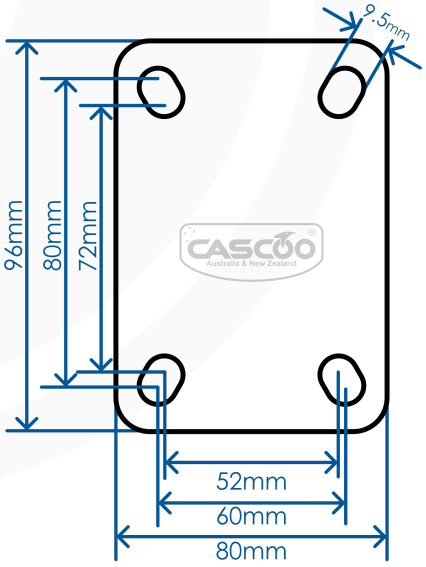

DANDENONG WHEELS & CASTORS
310 South Gippsland Highway, Dandenong South VIC 3175
(03) 9792 3949 | sales@dandenongcastors.com.au | www.dandenongcastors.com.au

Dandenong Wheels & Castors

CASCOO Australia & New Zealand

N2U6-125-STB

N2U6 SERIES SWIVEL TOTAL BRAKE CASTOR, Ø125MM WHEEL

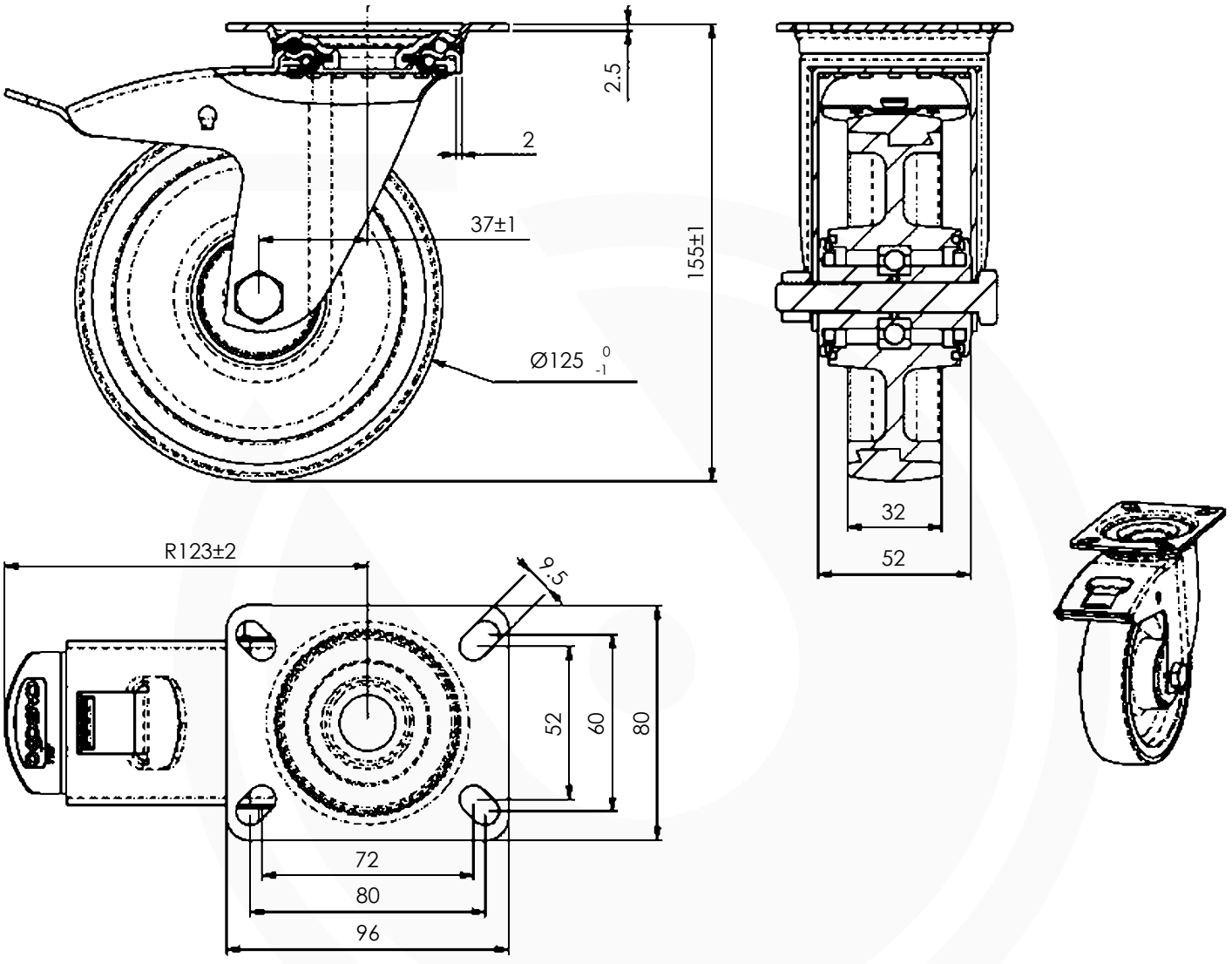

CASCOO Australia & New Zealand

STEP Files Available Online
Scan or click the QR code

DANDENONG WHEELS & CASTORS
310 South Gippsland Highway, Dandenong South VIC 3175
(03) 9792 3949 | sales@dandenongcastors.com.au | www.dandenongcastors.com.au