Dandenong Wheels & Castors

CASCOO Australia & New Zealand

PRODUCT DATA SHEET

N2U6-100-BH

N2U6 S/STEEL SWIVEL CASTOR
Ø13MM BOLT HOLE
Ø100MM BALL BEARING WHEEL



SPECIFICATIONS

WHEEL

Wheel Diameter	100 mm
Tread Width	32 mm
Hub Width	42 mm
Axle Size	M8
Tread Material	Red TPU, 95 Shore A
Wheel Material	Grey Polyamide
Bearing	Stainless Steel Ball Bearing
Thread Guard	Small Plastic Thread Guard
Operating Range	-40°C to +80°C

FRAME

Mount Type	Bolt Hole
Mount Material Thickness	2.5 mm
Fork Material Thickness	2.0 mm
Bolt Hole Diameter	13 mm
Axle Offset	36 mm
Overall Height	126 mm
Swivel Radius	*TBC*
Rated Capacity (4km/h)	150 kg
Complies With	DIN EN 12532

DANDENONG WHEELS & CASTORS
310 South Gippsland Highway, Dandenong South VIC 3175
(03) 9792 3949 | sales@dandenongcastors.com.au | www.dandenongcastors.com.au

Dandenong Wheels & Castors

CASCOO Australia & New Zealand

N2U6-100-BH

N2U6 SERIES BOLT HOLE SWIVEL CASTOR, Ø100MM WHEEL

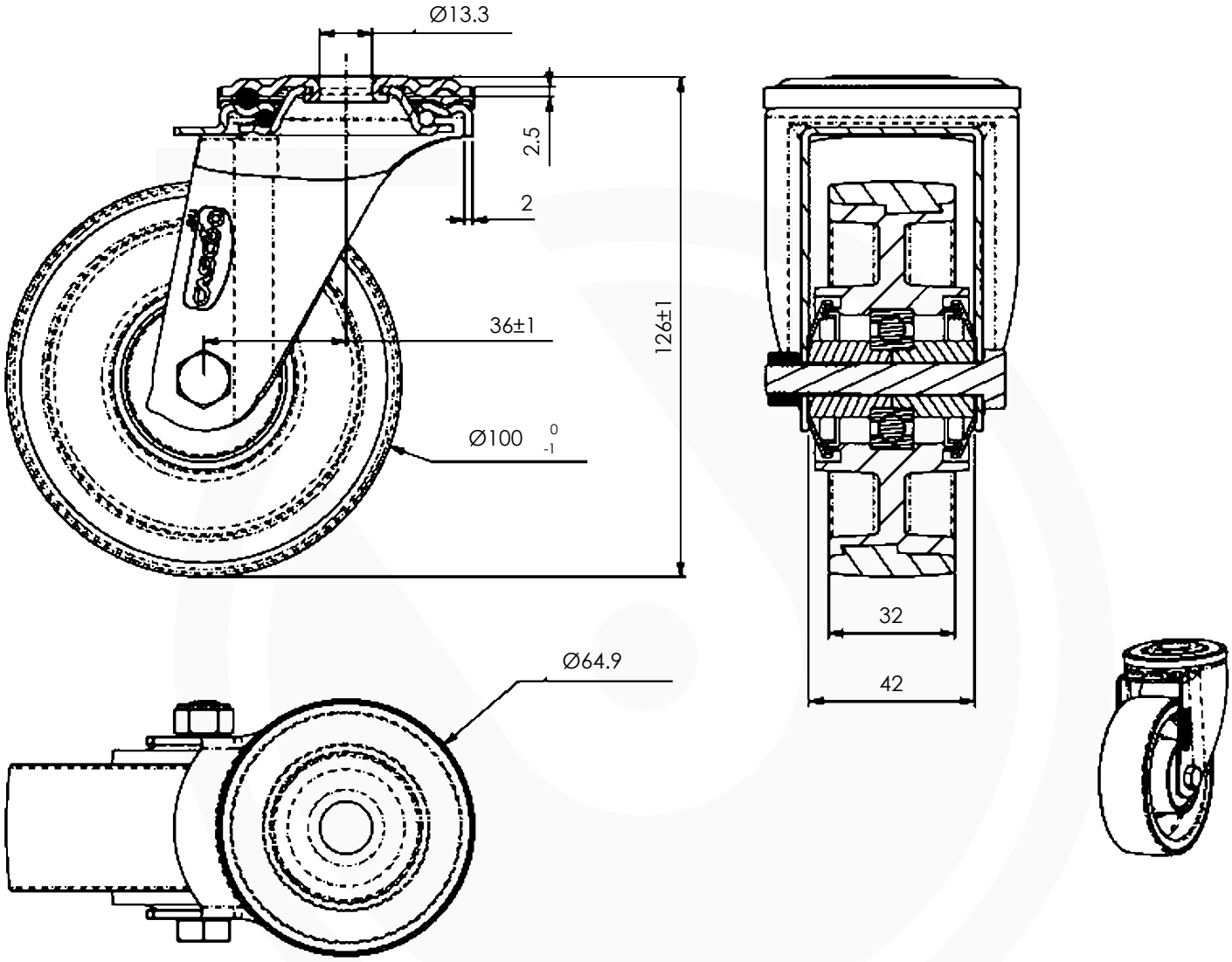

CASCOO Australia & New Zealand

STEP Files Available Online
Scan or click the QR code

DANDENONG WHEELS & CASTORS
310 South Gippsland Highway, Dandenong South VIC 3175
(03) 9792 3949 | sales@dandenongcastors.com.au | www.dandenongcastors.com.au