Dandenong Wheels & Castors

CASCOO® Australia & New Zealand

PRODUCT DATA SHEET

CARA-100-BH

CARA SERIES SWIVEL CASTOR
Ø11MM BOLT HOLE
Ø100MM BALL BEARING WHEEL

EAN: 4260654031072



SPECIFICATIONS

WHEEL

Wheel Diameter	100 mm
Tread Width	32 mm
Hub Width	32 mm
Axle Size	M8
Tread Material	Grey TPR, 85 Shore A
Wheel Material	Grey Polypropylene
Bearing	Ball Bearing
Thread Guard	Full Covering Plastic Thread Guard
Operating Range	-20°C to +60°C

FRAME

Mount Type	Bolt Hole
Mount Material Thickness	N/A
Fork Material Thickness	N/A
Bolt Hole Diameter	11 mm
Axle Offset	38 mm
Overall Height	137 mm
Swivel Radius	*TBC*
Rated Capacity (4km/h)	100 kg
Complies With	DIN EN 12527

DANDENONG WHEELS & CASTORS
310 South Gippsland Highway, Dandenong South VIC 3175
(03) 9792 3949 | sales@dandenongcastors.com.au | www.dandenongcastors.com.au

Dandenong Wheels & Castors

CASCOO Australia & New Zealand

CARA-100-BH

CARA SERIES BOLT HOLE SWIVEL CASTOR, Ø100MM WHEEL

EAN: 4260654031072

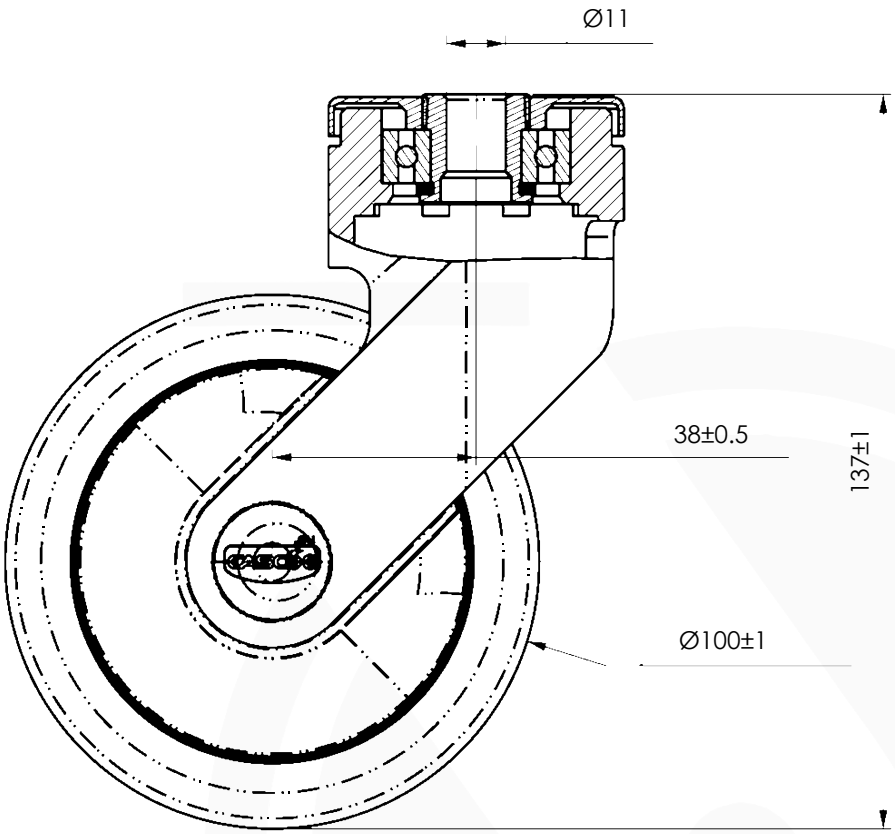

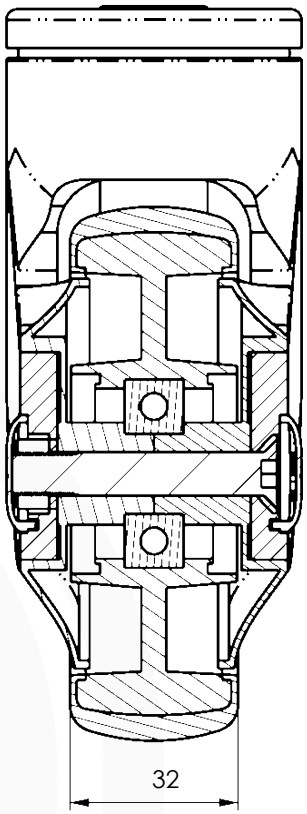

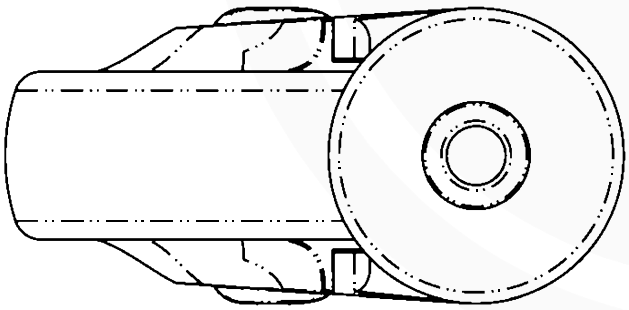

CASCOO Australia & New Zealand

STEP Files Available Online
Scan or click the QR code

DANDENONG WHEELS & CASTORS
310 South Gippsland Highway, Dandenong South VIC 3175
(03) 9792 3949 | sales@dandenongcastors.com.au | www.dandenongcastors.com.au